Alcoa Fastening Systems

ALCOA

Instruction Manual

Model 352

Pneumatic Installation Tool

Makers of Huck®, Marson®, Recoil®
Brand Fasteners, Tools & Accessories

05-26-2004
Form **HK200**

HUCK®

SAFETY

This instruction manual must be read with particular attention to the following safety guide lines, by any person servicing or operating this tool.

1. Safety Glossary

— Product complies with requirements set forth by the relevant European directives.

— Read manual prior to using equipment.

— Eye protection required while using this equipment.

— Hearing protection required while using this equipment.

WARNINGS - Must be understood to avoid severe personal injury.

CAUTIONS - *show conditions that will damage equipment and or structure.*
Notes - are reminders of required procedures.
Bold, Italic type and underlining - emphasizes a specific instruction.

2. Huck equipment must be maintained in a safe working condition at all times and inspected on a regular basis for damage or wear. Any repair should be done by a qualified repairman trained on Huck procedures.

3. Repairman and Operator must read manual prior to using equipment and understand any Warning and Caution stickers/labels supplied with equipment before connecting equipment to any primary power supply. As applicable, each of the sections in this manual have specific safety and other information.

4. See MSDS Specifications before servicing the tool. MSDS Specifications are available from you Huck representative or on-line at www.huck.com. Click on Installation Systems Division.

5. When repairing or operating Huck installation equipment, always wear approved eye protection. Where applicable, refer to ANSI Z87.1 - 1989

6. Disconnect primary power source before doing maintenance on Huck equipment.

7. If any equipment shows signs of damage, wear, or leakage, do not connect it to the primary power supply.

8. Make sure proper power source is used at all times.

9. Never remove any safety guards or pintail deflector.

10. Never install a fastener in free air. Personal injury from fastener ejecting may occur.

11. When using an offset nose always clear spent pintail out of nose assembly before installing the next fastener.

12. If there is a pinch point between trigger and work piece use remote trigger. (Remote triggers are available for all tooling).

13. Do not abuse tool by dropping or using it as a hammer. Never use hydraulic or air lines as a handle. Reasonable care of installation tools by operators is an important factor in maintaining tool efficiency, eliminating downtime, and in preventing an accident which may cause severe personal injury.

14. Never place hands between nose assembly and work piece.

15. Tools with ejector rods should never be cycled with out nose assembly installed.

16. When two piece lock bolts are being used always make sure the collar orientation is correct. See fastener data sheet of correct positioning.

CONTENTS

NOTICE

Please read this manual carefully. If you need further assistance, please contact your Huck representative or the nearest Huck office listed on the back cover.

Description

The Model 352 Huck Installation Tool is a pneumatic single-action tool for high speed installation of Huckbolt Fasteners and Huck Blind Fasteners.

Specifications

Weight	9 lbs
Overall Length	11-3/4 in.
Overall Width, without nose	6-3/8 in.
Stroke	9/16 in.

Note: Furnish 90 psi of clean dry air for proper operation.

Operation

The rectangular-shaped handle is rigidly attached to the adapter, which, in turn is bolted to the cylinder. The spindle and nose assembly, located in the top of the handle, install the Huckbolt Fasteners. Inside the handle is mounted the spindle-operating lever with its anti-friction roller, the upper ladder bearing cage and lower bearing on which the wedge rides, and the wedge and piston rod assembly that reciprocates between them to operate the spindle. The spindle lever, therefore, is the connecting link between the wedge and piston rod and the spindle, which is located in the spindle housing. The lower end of the spindle lever rides in the milled slot of the wedge while the upper end straddles the flats on the spindle.

During the working cycle, the wedge and piston rod move forward, pulling the lower end of the pivoted spindle lever forward. This forces the upper end of the spindle lever back, bringing the spindle and nose assembly parts back with it to install the fastener. The complete operating cycle of the tool is accomplished by one pull of the trigger.

Fig. 1

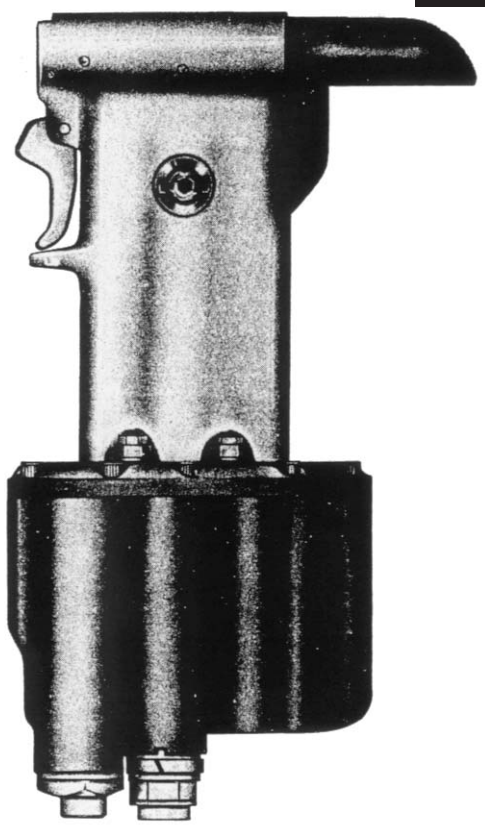

DISASSEMBLY AND REASSEMBLY

This section of the manual provides instructions first for disassembling the tool into its three main subassemblies (figure 2), and then for disassembling each of these subassemblies into component parts (figures 3, 4 and 5).

CAUTION: During reassembly procedure, first check condition of all O-Rings and that they and the grooves that receive them are clean and free of gunk and other foreign matter. Lubricate the O-Rings with LubripIate #130-AA, Parker O-Lub, or equivalent.

DISASSEMBLY INTO THREE MAIN SUBASSEMBLIES

The Huck 352 Tool is made up of three main subassemblies: Handle Assembly 105086, Adapter Assembly 105087, and Cylinder Assembly 105088.

To disassemble Cylinder Assembly from Tool:

1. Unscrew and remove the 12 socket head cap screws holding adapter and cylinder together.
2. Remove cylinder assembly taking care not to damage piston O-Ring.

To disassemble Handle and Adapter Assemblies:

NOTE: Trigger must face down when separating adapter from handle.

1. Unscrew and remove cross arm pivot from adapter.
2. Remove throttle valve cross arm from slot in adapter.
3. Unscrew and remove four Flexloc nuts and washers from base of handle.
4. Separate handle and adapter assemblies.

To reassemble Handle and Adapter Assemblies:

1. Position adapter assembly against handle base, with four retaining studs through handle holes.
2. Install four Flexloc nuts and washers. Torque to 60-75 in. lbs.
3. Place throttle valve cross arm in slot of adapter.

   NOTE: Make sure that the fork of the cross arm engages the end of the throttle wire.

4. Install cross arm pivot through throttle valve cross arm and tighten.

To reassemble Cylinder Assembly to Tool:

NOTE: Apply a liberal amount of Lubriplate #130-AA, Parker O-Lub, or equivalent to piston O-Ring before reassembling cylinder to adapter.

1. Locate cylinder assembly against adapter, making certain that piston O-Ring is not damaged and that the cylinder is seated evenly against adapter.
2. Install and tighten the 12 socket head cap screws and lockwashers.

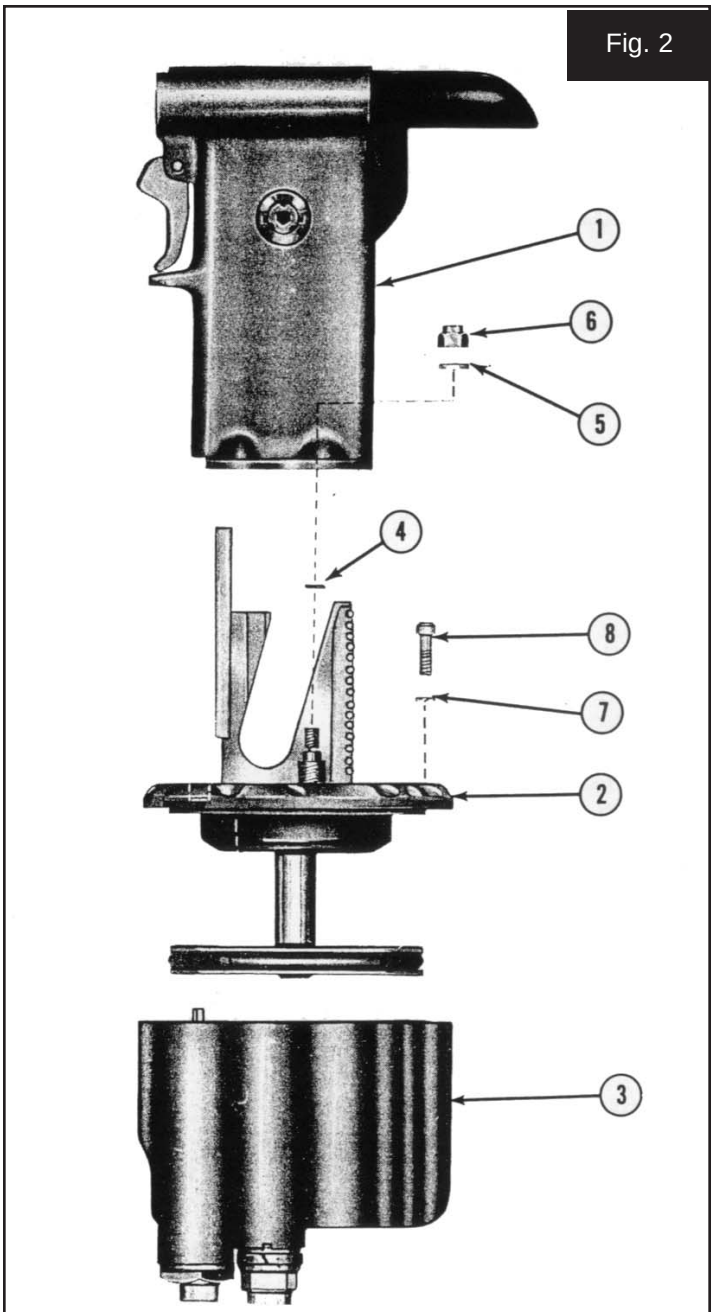

FIGURE 2. 352 TOOL EXPLODE, THREE MAIN SUBASSEMBLIES

SUBASSEMBLY PARTS LIST

REF. FIG. NO.	PART NAME	PART NO.	NO. REQ'D
2-1	Handle Assembly	105086	1
2-2	Adapter Assembly	105087	1
2-3	Cylinder Assembly	105088	1
2-4	O-Ring - ARP568-011	500777	4
2-5	Washer-Nut	84198	4
2-6	Nut-Flexloc, 1/4 - 28	501057	4
2-7	Lockwasher - .194 x .353 x .056	502585	12
2-8	Screw-Socket Head, #10-24 x 3/4	500063	12

DISASSEMBLY OF HANDLE ASSEMBLY

1. Unscrew and remove two socket head cap screws (3-2) from pintail deflector (3-3) and remove deflector.
2. If necessary for replacement, remove the two deflector screw bushings (3-4).
3. Remove socket flat head cap screw (3-5) lockwasher (3-6) and retainer washer (3-7) from side of handle (3-1).
4. Push spindle lever shaft (3-8) out of handle.
5. Drop spindle lever (3-10) from handle. Press roller shaft (3-11) from side opposite marked "large end" from spindle lever to release spindle lever roller (3-12) and bearings (3-13).
6. Remove spindle (3-15).
7. Drive anvil holder retainer roll pin (3-16) from handle. Remove anvil holder retainer (3-17) and spring (3-18).
8. Unscrew and remove set screw (3-19) from throttle wire adjusting end (3-20) and remove locking ball (3-21).
9. Slide out throttle wire (3-22) and remove wire adjusting end (3-20) from handle (3-1).
10. Drive cotter pin (3-23) out of throttle lever pin (3-24), and remove pin, releasing the trigger assembly.
11. Holding the trigger assembly by means of a "C" clamp, drive out sleeve (3-25). This releases throttle lever (3-26), inner spring (3-27), outer spring (3-28) and throttle lever arm (3-29).

REASSEMBLY OF HANDLE ASSEMBLY

Reassemble handle assembly in reverse order of disassembly. CAUTION: Make sure that spindle lever (3-10) straddles the flats of spindle (3-15) and the milled slot faces downward. Also, make sure that the milled slot in the spindle lever shaft (3-8) faces the trigger. This is done by aligning the keyway in the shaft, with the keys of retainer washer (3-7) and keyway in the handle.
NOTE: All moving parts must be lubricated.

NOTE: If tracks in handle and tracks assembly are worn or damaged, return to Huck for replacement.

HANDLE ASSEMBLY PARTS LIST

REF. FIG. NO.	PART NAME	PART NO.	NO. REQ'D.
	Handle Assembly	105086	1
3-1	*Handle and Tracks Assembly	93620	1
3-2	Screw - Pintail Deflector	500102	2
3-3	**Deflector - Pintail	82801	1
3-4	Bushing - Deflector Screw	88822	2
3-5	Screw - Soc. (Special)	82835	1
3-6	Lockwasher	84222	1
3-7	Washer	82849	1
3-8	Shaft - Spindle Lever	123913	1
3-10	Lever - Spindle	82847	1
3-11	Shaft - Lever Roller	82852	1
3-12	Roller - Spindle Lever	82851	1
3-13	Bearing - Lever Roller, Needle	503660	23
3-15	Spindle	114540	1
3-16	Pin - Roll, .078 x .875	501404	1
3-17	Retainer - Anvil Holder	93951	1
3-18	Spring - Retainer	93952	1
3-19	Screw - Set, Flat Point, #8-32 x 3/16	501781	1
3-20	End - Throttle Wire Adjusting	82844	1
3-21	Ball - Locking	502520	1
3-22	Wire Throttle	79559	1

*Includes Ref. Nos. 3-16, 3-17 and 3-18 and Tracks.

(HANDLE ASSEMBLY PARTS LIST Cont'd.)

REF. FIG. NO.	PART NAME	PART NO.	NO. REQ'D
3-23	Pin - Cotter, 1/16 x 1/2	501308	1
3-24	Pin - Throttle Lever	89695	1
3-25	Sleeve - Throttle Lever	33301	1
3-26	*Lever - Throttle Lever	106073	1
3-27	Spring - Inner	33302	1
3-28	Spring - Outer	33303	1
3-29	Arm - Throttle lever	33300	1

Fig. 3

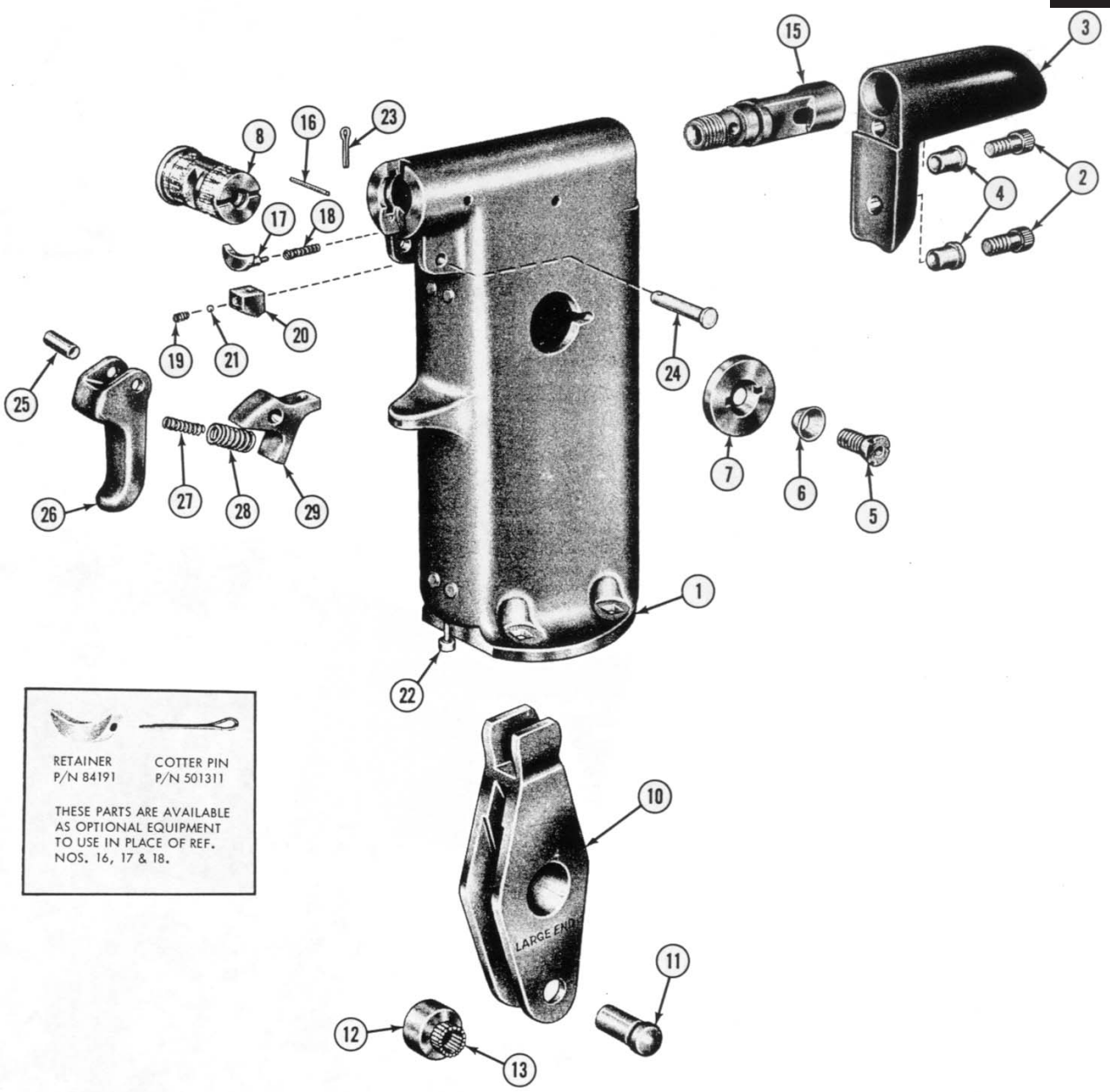

FIGURE 3. HANDLE ASSEMBLY, EXPLODED VIEW

DISASSEMBLY OF ADAPTER ASSEMBLY

1. Unscrew and remove socket head screw (4-1) from wedge and piston rod (4-2).
2. Remove piston (4-3) from wedge and piston rod.
3. Remove O-Ring (4-4) from piston.
4. Remove piston bumper (4-5) and gasket (4-6) from adapter (4-8).
5. Remove wedge and piston rod (4-2) from adapter.
6. If necessary to replace, press seal (4-7) out of adapter. **CAUTION**: If seal is removed, it must be replaced by a new seal.
   NOTE: Cross arm pivot (4-10), cross arm (4-11), Flexloc nuts (2-6) washers, (2-5) are normally removed when removing the handle assembly from the 352 Installation Tool (See pages 6 and 7). The 12 socket head screws (2-8) and lockwashers (2-7) are removed when separating the cylinder from the 352 Tool.
7. Remove four O-Rings (2-4) from adapter studs (4-12).
8. Unscrew and remove the four adapter studs (4-12). NOTE: *Left hand thread.*
9. Slide bearing and cage assembly (4-13) off of wedge and piston rod (4-2).
10. Reach into the handle with a screwdriver and pry out the lower bearing (4-14).

REASSEMBLY OF ADAPTER ASSEMBLY

Reassemble adapter assembly in reverse order of disassembly. **CAUTION**: When reinstalling the four adapter studs thread them fully in. Otherwise, the handle will remain loose after the Flexloc nuts are fully tightened. Also, exercise great care when replacing seal. Press it into place flush and square with the bore. When installing piston on rod make certain tint the flat side of the piston slides on first. Tighten socket head screw to 55-60 ft. lbs.

ADAPTER ASSEMBLY PARTS LIST

REF. FIG. NO.	PART NAME	PART NO.	NO. REQ'D.
-	Adapter Assembly	105087	1
4-1	Screw - Socket Head, 3/8-24 x 3/4	501299	1
4-2	Rod - Wedge and Piston	82826	1
4-3	Piston	89296	1
4-4	O-Ring - ARP 568-344	500907	1
4-5	Bumper - Piston	82828	1
4-6	Gasket - Adapter	82808	1
4-7	Seal - Cylinder Adapter	84382	1
4-8	*Adapter Sub-Assembly	82806	1
4-9	Pin	5418	2
4-10	Pivot - Cross Arm	82830	1
4-11	Arm - Throttle Valve Cross	82829	1
4-12	Stud-Adapter	110283	4
4-13	Bearing and Cage Assembly	82867	1
4-14	Bearing-Lower	88846	1

* Includes Ref. Nos. 4-7, 4-9 and 4-12.

Fig. 4

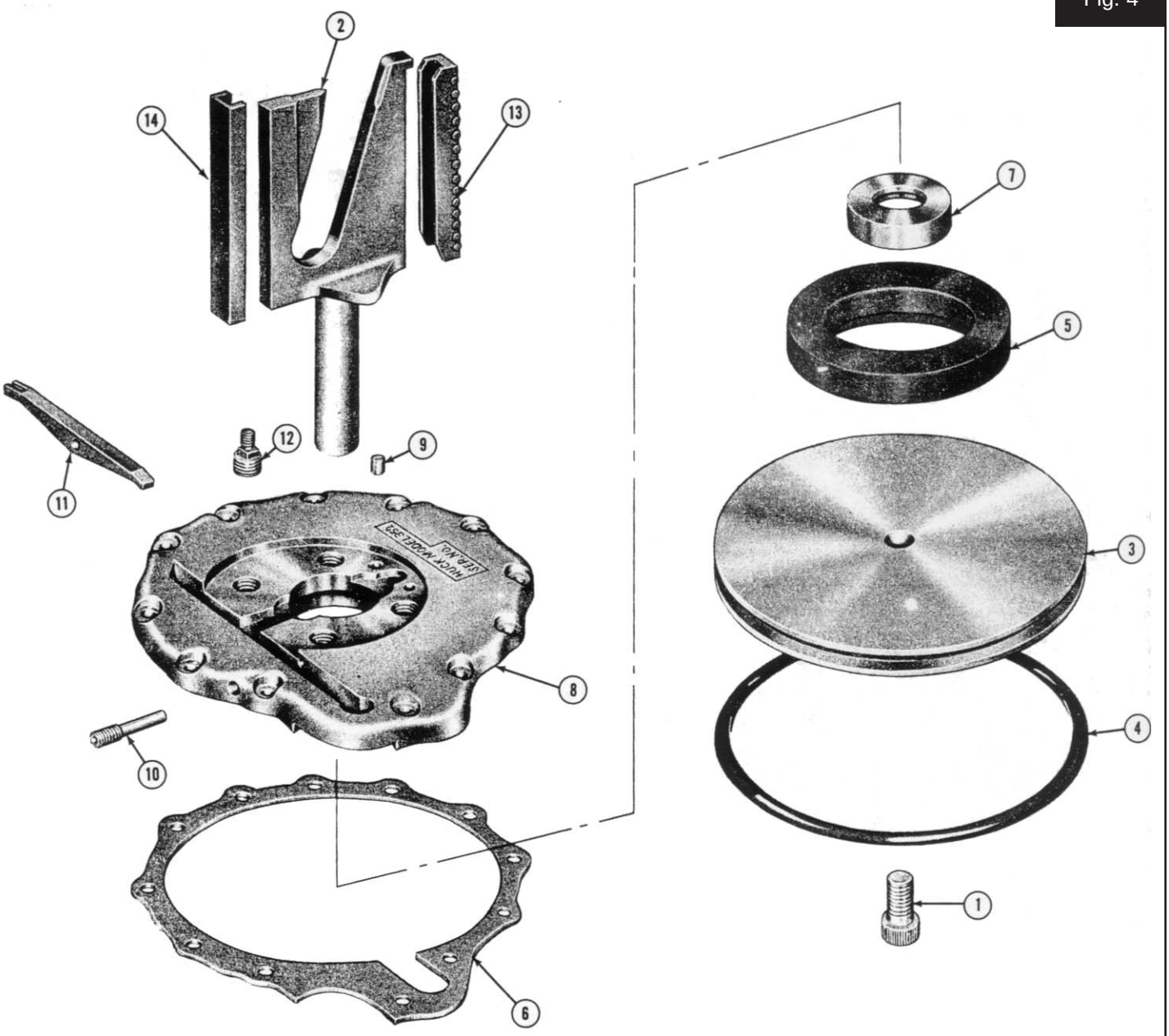

FIGURE 4. ADAPTER ASSEMBLY, EXPLODED VIEW

DISASSEMBLY OF CYLINDER ASSEMBLY

1. Unscrew set screw (5-3) and remove screw and plug (5-4) from side of cylinder (5-2).
2. Using wrench 82647 or similar, turn throttle valve push pin (5-1) as a tool to unscrew and remove throttle valve front seat (5-5).
3. Remove throttle valve push pin (5-1) from seat (5-5).
4. Remove O-Ring (5-6) from valve seat (5-5).
5. Unscrew and remove air inlet bushing (5-7) from cylinder, and remove O-Ring (5-8) from bushing.
6. Remove heavy lockwasher (5-9) and inlet bushing lockwasher (5-10) from cylinder.
7. Unscrew and remove valve seat locknut (5-11) and lockring (5-12) from throttle valve rear seat (5-13).
8. Unscrew and remove throttle valve rear seat (5-13) from cylinder.
9. Remove O-Ring (5-14) from throttle valve rear seat.
10. Remove throttle valve spring (5-15) and locator (5-16) from valve.
11. Unscrew and remove socket head cap screw (5-17) from throttle valve spacer (5-23).
12. Remove valve screw washer (5-18), the two O-Ring end supports (5—19). O-Rings (5-20) and O-Ring center support (5-21) from throttle valve spacer (5-23). *NOTE: Refer to page 14 for specific instructions for replacing throttle valve O-Rings.*
13. Remove these parts from the opposite end of the valve.
14. If necessary to replace, press throttle valve spacer bushing (5-22) from cylinder (5-2).

REASSEMBLY OF CYLINDER ASSEMBLY

Reassemble in reverse order of disassembly. When reassembling, thread the rear throttle valve seat (5-13), with spring (5-15) and locator (5-16) in place, into the cylinder until the end of the seat extends 5/16 beyond the edge of the cylinder. The front valve seat (5-5) should be screwed in until flush with the cylinder.

NOTE: After reassembly is complete, the throttle valve must be adjusted as explained on page 15.

ADAPTER ASSEMBLY PARTS LIST

REF. FIG. NO.	PART NAME	PART NO.	NO. REQ'D.
-	Cylinder Assembly	105088	1
-	*Throttle Valve Assembly	79554	1
5-1	Pin - Throttle Valve, Push	82821	1
5-2	**Cylinder Sub-Assembly	79698	1
5-3	Screw - Cup Point Set, #10-24 x 1/4	501625	1
5-4	Plug - Bushing Block	89083	1
5-5	Seat - Throttle Valve, Front	82812	1
5-6	O-Ring - ARP 568-012	500778	1
5-7	Bushing - Air Inlet	84428	1
5-8	O-Ring - ARP 568-012	500778	1
5-9	Lockwasher - Extra Heavy, 9/16	502604	1
5-10	Lockwasher - Inlet Bushing	84430	1
5-11	Locknut - Bushing	89085	1
5-12	Lock Ring - Bushing	89084	1
5-13	Seat - Throttle Valve, Rear	89086	1
5-14	O-Ring - ARP 568-012	500778	1
5-15	Spring - Throttle Valve	82819	1
5-16	Locator - Spring	82820	1
5-17	Screw - Socket Head, #8-32 x 3/8	500054	2
5-18	Washer - Valve Screw	82816	2
5-19	Support - O-Ring, End	83706	4
5-20	O-Ring - Valve, ARP 568-011	500777	4
5-21	Support - O-Ring, Center	83705	2
5-22	Bushing - Throttle Valve Spacer	82811	1
5-23	Spacer - Throttle Valve	83704	1

* Includes Ref. Nos. 5-17, 5-18, 5-19, 5-20, 5-21 and 5-23.

Fig. 5

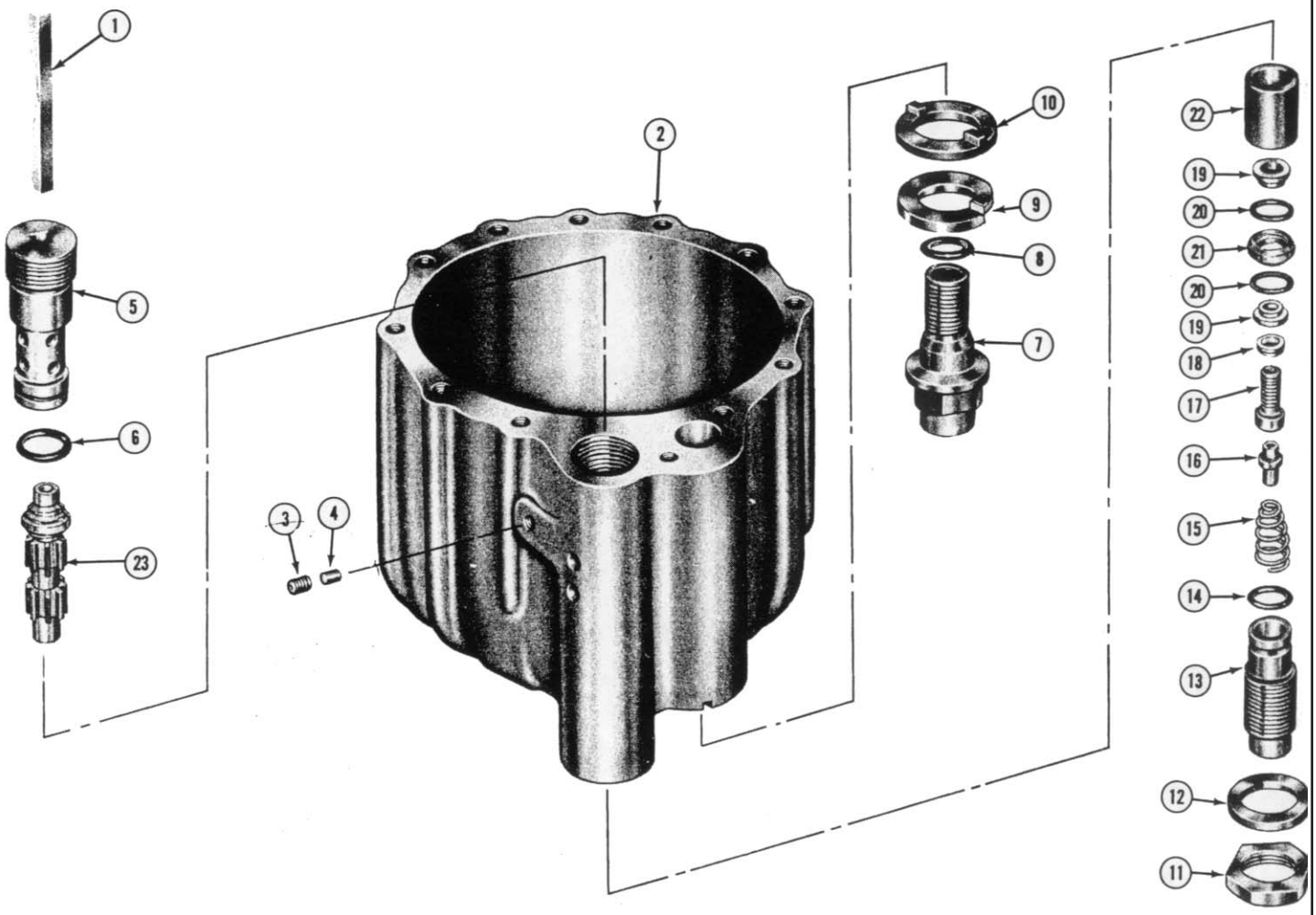

FIGURE 5. CYLINDER ASSEMBLY, EXPLODED VIEW

MAINTENANCE

Regular inspection and maintenance can avoid more extensive repairs in the future and will maintain the tool at its peak efficiency at all times. (Repair parts are available through the Huck Manufacturing Company.)

NOTE: Refer to Page 17 for special tools and service parts.

DAILY MAINTENANCE

Daily before putting tool into service comply with instructions as follows: Always blow out air line to clear it of all accumulated dirt or water before connecting air hose to tool. Pour a small quantity of clean, light oil (SAE #10) into air inlet, If the tool is in continuous use, the air hose should be disconnected and the tool lubricated with a few drops of oil every two or three hours. Refer to Huck Nose Assembly Selection Chart for proper nose assemblies for fasteners used. Check to see that nose assemblies are equipped with correct size chuck jaws and anvils to fit the fasteners being driven.

PERIODIC MAINTENANCE

At regular periods the valve mechanism in the cylinder assembly should be disassembled and carefully inspected for scored surfaces and worn 0—Rings. Chuck Jaws should be inspected periodically and the grooves in the jaws cleaned thoroughly. Cleaning may easily be accomplished by taking a small pistol brush, Huck Part Number 105805 or 105806 and Thoroughly brushing out nose with petroleum spirits. Small particles of metal which are sheared off of the fastener pin eventually fill up the grooves causing the jaws to slip over the grooves on the pin. Lubricate the spindle at frequent intervals through oil holes (Y) in the side of the spindle housing (See Fig. 6). **CAUTION**: Do not over lubricate. If too much oil is used, the excess oil may find its way through two openings to the inside of the spindle and downward to the chuck jaws. With the inside of the chuck jaws coated with oil small particles of metal, which are sheared off of the fastener pin, collect and eventually fill up the grooves in the chuck jaws, causing them to slip over the grooves on the pin.

AIR LINES, FITTINGS, PRESSURE

Air Line Lubricator is recommended for use with all air powered tools, Use hose and connections of proper size and in good condition. The following is a list of minimum inside diameters for both hose and hose fittings:

1/4” Hose (Inside Diameter)
3/16” Fittings (Inside Diameter)

Wet or dirty air will seriously affect tool performance and tool life. Use of air line separators and filters is recommended for use with this tool. Keep tool properly lubricated. Provide 90 psi of clean, dry air at the tool.

CAUTION: Do not use air pressure greater than 100 psi as this will cause the O-Rings to become dislodged from their mountings.

STORAGE

If tool is to be stored for any length of time, pour a quantity of clean, light oil in air inlet and blow through the tool to coat all parts with oil.

REPLACING THROTTLE VALVE O-RINGS

1. Loosen set screw (5-3) to release bushing block plug (5-4) and free valve front seat.
2. Remove the 12 set screws (2-8) and lockwashers (2-7) to separate the adanter and cylinder assemblies. Remove the cylinder for removal of the throttle valve front seat (5-5).

REPLACING THROTTLE VALVE O-RINGS (Cont'd.)

3. Remove cross arm pivot pin (4-10) and cross arm (4-11).
4. Using wrench 82647 (figure 7), turn throttle valve push pin (5-1) to unscrew and remove the front seat (5-5).
5. After loosening locknut (5-11), remove the throttle valve rear seat (5-13).
6. Remove screws (5-17) from both ends of the valve, and slide off washers (5-18) and end supports (5-19).
7. Remove and replace O-Rings (5-20).
8. Reassemble valve and secure Tool in reverse order of steps 1 through 6 above.

ADJUSTING THE THROTTLE VALVE

The tool needs adjusting when air leaks by ports "A" or "B" (figure 6). There should be no leakage when the trigger is held depressed, nor can there be any leakage when the trigger is not depressed. The procedure for adjusting the throttle valve of a fully-assembled tool is described below:

1. Connect the compressed air supply to the tool.
2. Loosen set screw (5-3) to release the valve front seat (5-5).
3. Remove locknut (5-11) and lockring (5-12) to release the valve rear seat (5-13).
4. Insert wrench 82647 (figure 7) into slot "C" (figure 6) and turn push pin (5-1) in either direction as necessary until the leakage stops.
5. Hold Trigger depressed, and, if necessary, turn valve rear seat (5-13) until air leakage stops. Release throttle.
6. Cycle tool several times to make sure that there is no leakage.
7. Disconnect the compressed air.
8. Tighten set screw (5-3), and reinstall and secure lockring (5-12) and locknut (5-11).

NOTE
If leakage does not stop, the throttle valve O-Rings (5-20) must be replaced (page 14) and the tool readjusted.

Fig. 6

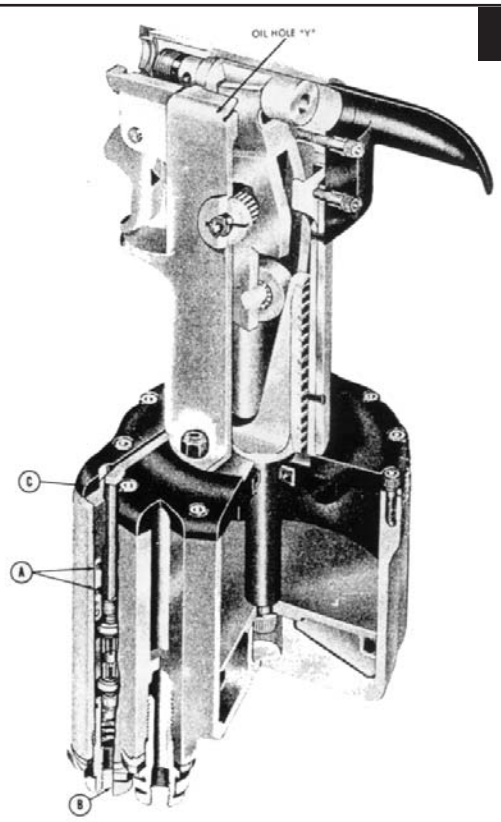

FIGURE 6. 352 TOOL, CUTAWAY VIEW

MALFUNCTION	PROBABLE CAUSE	CORRECTIVE ACTION
1. Loss of power and/or erratic action.	Low pressure at the tool.	Bring air pressure to **90** to **100** PSI.
2. Low pressure at the tool.	a. Lowered compressor output. b. Excessive drain on air line.	a. Check compressor for malfunction. b. Check air lines for cracks, punctures, kinks etc. Replace hose when necessary.
	c. Use of defective hose or hose connections.	c. Check hose connections for cross threading and improve fittings.
3. Normal pressure at the tool with loss of power.	a. Defective or worn O-Ring (4-4) on piston (4-3).	a. Check O-Ring and replace if necessary.
	b. Defective or worn adaptor seal (5-7).	b. Check adapter seal (4-7) and replace if necessary.
	c. Air leak at ports “A” and “B” or both (Fig. 6).	c. Adjustment is required, See page 15.
	d. Seizure of bearings (3-9) or lever roller bearings (3-13).	d. Bearings and all associated hardware should be checked for excessive wear, improper lubrication or mechanical failure, replace where necessary.
4. Air leak port “B” of bottom valve with throttle lever not depressed. (Fig. 6)	Top valve is turned in too far.	Turn top valve seat (5-5) to bring it out until air leak is eliminated.
5. Air leak at exhaust ports ‘‘A’ with throttle lever not depressed.	Top valve seat (5-5) is not turned in far enough.	Turn top valve seat (5-5) to bring it out until air leak is eliminated.
6. Air leak at port “B” of bottom valve with throttle depressed.	Rear valve seat (5-13) is not turned in far enough.	Turn rear valve seat (5-13) in further until air leak is eliminated.
7. Air leak at exhaust port A” with throttle lever depressed.	Rear valve seat (5-13) is turned in too far.	Turn rear valve seat (5-13) out until air leak is eliminated.
8. Intermittent or restricted strokes, gradual loss of stroke until tool stalls.	Pin tail deflector screws (3-2) too long, pressing against upper bearing ladder cage (4-16) or sheared off. Shaft (3-8)or spindle lever (3-10) in wrong.	Check length of pintail deflector screw. Replace if necessary. Check upper bearing ladder cage (4-16) for damage. Reverse shaft (3-8) or lever (3-10).
9. Air leak at ports “A” or “B” after adjustments have been made.	Worn or defective throttle valve O-Rings (5-20).	Install new throttle valve O-Rings as per instructions on page 14.

*Before making adjustments, be sure to loosen lock plug screw (5-3). After adjustment, retighten.

SERVICE TOOLS AND KIT

Fig. 7

84212
COLLET LOCK COLLAR PUNCH

82647
THROTTLE VALVE BUSHING
ADJUSTING WRENCH

FIGURE 7. SERVICE TOOLS FURNISHED WITH EACH MODEL 352 TOOL

After proper adjustments have been made, the nose assembly lock collar must be staked to the spindle using Punch, P/N 84212.

NOTES

1. *All part numbers shown in this manual are available from Huck for replacement.*
2. *Part numbers in the 500000 series are standard items purchasable at most local supply firms.*
3. *ARP = Aeronautical Recommended Practice for O-ring size designation.*
4. *Back-up rings are W.S. Shamban Teflon or equivalent MS -28774.*
5. *Material specification for O-rings is SAE SB715B$_1$E$_3$F$_2$ (70 Durometer).*

SERVICE PARTS KIT 91533 FOR HUCK 352 TOOL

PART NO.	PART NAME	NO. OF PARTS IN KIT
503382	Bearing-Spindle Lever Shaft	74
82835	Screw-Socket Head, Special	1
82849	Washer-Retainer	1
93951	Retainer	1
*501781	Screw-Set, Headless #8-32 x 3/16	1
*502520	Ball-Throttle Wire, Locking 1/8 Dia.	1
82830	Pivot-Cross Arm	1
89695	Pin-Throttle Lever	1
79559	Wire-Throttle	1
88846	Bearing-Lower	1
503660	Bearing-Roller Shaft	23
*501057	Nut-Flexloc, 1/4-28	4
82821	Pin-Throttle Valve, Push	1
83706	Support-End	2
*500777	O-Ring - ARP 568-011	8
83705	Support-Center	2
*500778	O-Ring - ARP 568-012	4
82820	Locator-Spring	1
82819	Spring-Throttle Valve	1
89086	Seat-Throttle Valve, Rear	1
*500054	Screw-Socket Head, #8-32 x 3/8	2
82816	Washer-Throttle Valve Screw	2
*501059	Nut - 3/8-24	1
*500907	O-Ring - ARP 568-344	1
84198	Washer-Adapter Stud Nut	4
110283	Stud-Adapter	2
*500102	Screw-Socket Head, Cap #10-32 x 5/8	2
82867	Cage and Bearing Assembly	1
*501404	Pin-Roll, 5/64 x 7/8	1
93952	Spring-Anvil Holder Ret.	1
82812	Seat-Throttle Valve, Front	1
84382	Seal-Cylinder Adapter	1
82828	Bumper-Piston	1
82808	Gasket-Cylinder Adapter	1
*502585	Lockwasher-Heavy, #10	6
*500063	Screw-Socket Hand, Cap #10-24 x 3/4	6
*501308	Pin-Cotter, 1/16 Dia. x 1/2	1

* All 500000 Series Part Nos. are Standard, purchasable items at local supply firms.

NOTE: Refer to Huck Nose Assembly Selection Chart for proper nose assemblies. Copies may be obtained from your Huck Representative.

Service notes:

LIMITED WARRANTIES

Tooling Warranty: Huck warrants that tooling and other items (excluding fasteners, and hereinafter referred as "other items") manufactured by Huck shall be free from defects in workmanship and materials for a period of ninety (90) days from the date of original purchase.

Warranty on "non standard or custom manufactured products": With regard to non-standard products or custom manufactured products to customer's specifications, Huck warrants for a period of ninety (90) days from the date of purchase that such products shall meet Buyer's specifications, be free of defects in workmanship and materials. Such warranty shall not be effective with respect to non-standard or custom products manufactured using buyer-supplied molds, material, tooling and fixtures that are not in good condition or repair and suitable for their intended purpose.

THERE ARE NO WARRANTIES WHICH EXTEND BEYOND THE DESCRIPTION ON THE FACE HEREOF. HUCK MAKES NO OTHER WARRANTIES AND EXPRESSLY DISCLAIMS ANY OTHER WARRANTIES, INCLUDING IMPLIED WARRANTIES AS TO MERCHANTABILITY OR AS TO THE FITNESS OF THE TOOLING, OTHER ITEMS, NONSTANDARD OR CUSTOM MANUFACTURED PRODUCTS FOR ANY PARTICULAR PURPOSE AND HUCK SHALL NOT BE LIABLE FOR ANY LOSS OR DAMAGE, DIRECTLY OR INDIRECTLY, ARISING FROM THE USE OF SUCH TOOLING, OTHER ITEMS, NONSTANDARD OR CUSTOM MANUFACTURED PRODUCTS OR BREACH OF WARRANTY OR FOR ANY CLAIM FOR INCIDENTAL OR CONSEQUENTIAL DAMAGES.

Huck's sole liability and Buyer's exclusive remedy for any breach of warranty shall be limited, at Huck's option, to replacement or repair, at FOB Huck's plant, of Huck manufactured tooling, other items, nonstandard or custom products found to be defective in specifications, workmanship and materials not otherwise the direct or indirect cause of Buyer supplied molds, material, tooling or fixtures. Buyer shall give Huck written notice of claims for defects within the ninety (90) day warranty period for tooling, other items, nonstandard or custom products described above and Huck shall inspect products for which such claim is made.

Tooling, Part(s) and Other Items not manufactured by Huck.

HUCK MAKES NO WARRANTY WITH RESPECT TO THE TOOLING, PART(S) OR OTHER ITEMS MANUFACTURED BY THIRD PARTIES. HUCK EXPRESSLY DISCLAIMS ANY WARRANTY EXPRESSED OR IMPLIED, AS TO THE CONDITION, DESIGN, OPERATION, MERCHANTABILITY OR FITNESS FOR USE OF ANY TOOL, PART(S), OR OTHER ITEMS THEREOF NOT MANUFACTURED BY HUCK. HUCK SHALL NOT BE LIABLE FOR ANY LOSS OR DAMAGE, DIRECTLY OR INDIRECTLY, ARISING FROM THE USE OF SUCH TOOLING, PART(S) OR OTHER ITEMS OR BREACH OF WARRANTY OR FOR ANY CLAIM FOR INCIDENTAL OR CONSEQUENTIAL DAMAGES.

The only warranties made with respect to such tool, part(s) or other items thereof are those made by the manufacturer thereof and Huck agrees to cooperate with Buyer in enforcing such warranties when such action is necessary.

Huck shall not be liable for any loss or damage resulting from delays or nonfulfillment of orders owing to strikes, fires, accidents, transportation companies or for any reason or reasons beyond the control of the Huck or its suppliers.

Huck Installation Equipment

Huck International, Inc. reserves the right to make changes in specifications and design and to discontinue models without notice.

Huck Installation Equipment should be serviced by trained service technicians only.

Always give the Serial Number of the equipment when corresponding or ordering service parts.

Complete repair facilities are maintained by Huck International, Inc. Please contact one of the offices listed below.

<u>Eastern</u>
One Corporate Drive Kingston, New York 12401-0250
Telephone (845) 331-7300 FAX (845) 334-7333

<u>Canada</u>
6150 Kennedy Road Unit 10, Mississauga, Ontario, L5T2J4, Canada.
Telephone (905) 564-4825 FAX (905) 564-1963

<u>Outside USA and Canada</u>
Contact your nearest Huck International Office, see back cover.

In addition to the above repair facilities, there are Authorized Tool Service Centers (ATSC's) located throughout the United States. These service centers offer repair services, spare parts, Service Parts Kits, Service Tools Kits and Nose Assemblies. Please contact your Huck Representative or the nearest Huck office listed on the back cover for the ATSC in your area.

HUCK

For the Long Haul™

A Global Organization

Alcoa Fastening Systems (AFS) maintains company offices throughout the United States and Canada, with subsidiary offices in many other countries. Authorized AFS distributors are also located in many of the world's industrial and Aerspace centers, where they provide a ready source of AFS fasteners, installation tools, tool parts, and application assistance.

Alcoa Fastening Systems world-wide locations:

Americas

Alcoa Fastening Systems
Aerospace Products
Tucson Operations
3724 East Columbia
Tucson, AZ 85714
800-234-4825
520-747-9898
FAX: 520-748-2142

Alcoa Fastening Systems
Aerospace Products
Carson Operations
PO Box 5268
900 Watson Center Rd.
Carson, CA 90749
800-421-1459
310-830-8200
FAX: 310-830-1436

Alcoa Fastening Systems
Commercial Products
Waco Operations
PO Box 8117
8001 Imperial Drive
Waco, TX 76714-8117
800-388-4825
254-776-2000
FAX: 254-751-5259

Alcoa Fastening Systems
Commercial Products
Kingston Operations
1 Corporate Drive
Kingston, NY 12401
800-431-3091
845-331-7300
FAX: 845-334-7333
www.hucktools.com

Alcoa Fastening Systems
Commercial Products
Canada Operations
6150 Kennedy Road, Unit 10
Mississagua, Ontario L5T2J4
Canada
905-564-4825
FAX: 905-564-1963

Alcoa Fastening Systems
Commercial Products
Latin America Operations
Avenida Parque Lira. 79-402
Tacubaya Mexico, D.F.
C.P. 11850
FAX: 525-515-1776
TELEX: 1173530 LUKSME

Far East

Alcoa Fastening Systems
Commercial Products
Australia Operations
14 Viewtech Place
Rowville, Victoria
Australia 3178
03-764-5500
Toll Free: 008-335-030
FAX: 03-764-5510

Europe

Alcoa Fastening Systems
Commercial Products
United Kingdom Operations
Unit C, Stafford Park 7
Telford, Shropshire
England TF3 3BQ
01952-290011
FAX: 0952-290459

Alcoa Fastening Systems
Aerospace Products
France Operations
Clos D'Asseville
BP4
95450 Us Par Vigny
France
33-1-30-27-9500
FAX: 33-1-34-66-0600

CERTIFIED FACILITY
INSTALLATION SYSTEMS DIVISION
ISO 9001

Alcoa Fastening Systems

ALCOA

One Great Connection℠

HWB898 1003-5M

1 Corporate Drive, Kingston, NY 12401 • Tel: 800-431-3091 • Fax: 845-334-7333 • E-mail: hkitoolinfo@alcoa.com • www.alcoafasteningsystems.com